LINE NUMBER	LIST OF DRAWINGS	DRAWING NUMBER	REVISION
1	HANDLE, CARRYING, ASSEMBLY	C7312973	
2			
3	COMBINED LIST OF ALL PARTS DRAWING.	C7313101	
4			
5			
6		A7312896	
7		A7312897	
8		A7312900	
9		B7312901	
10		B7312974	
11		B7312975	
12		B7312976	
13		B7312977	
14		B7313098	
15	NUT, HEXAGON, NC-2	BBAX1	
16	PIN, STRAIGHT, STEEL	BFDX2	
17	SCREW, CAP, HEXAGON HEAD, NC-2	BCAX1.1	
18	WASHER, LOCK	BECX2	

LINE NUMBER	LIST OF SPECIFICATIONS	SPECIFICATION NUMBER	REVISION
1	HANDLE, CARRYING, ASSEMBLY		
2			
3	FINISHES, PROTECTIVE, FOR IRON AND STEEL PARTS	USA 57-0-2	
4	MANUFACTURE AND INSPECTION OF SMALL ARMS WEAP-	USA 52-0-1	
5	ONS, SPARE AND REPLACEMENT PARTS AND ACCESSORIES.		
6	METALS; GENERAL SPECIFICATION FOR INSPECTION OF.	FED. QQ-M-151	
7	FINISH, PROTECTIVE, GUN STOCK (FOR SMALL ARMS)	SXS-147	
8	OIL, LINSEED, RAW.	FED JJJ-0-336	
9	STEEL, CARBON AND ALLOY, BARS	USA 57-107	
10	STEEL, CARBON AND ALLOY; SHEETS AND STRIPS	USA 57-136	
11	WOOD, BLACK WALNUT, FOR SMALL ARMS	USA 82-11	
12	GENERAL SPECIFICATION FOR PACKAGING AND	USA 100-14	
13	PACKING FOR OVERSEAS SHIPMENT.		
14	STANDARD SPECIFICATION FOR MARKING SHIP-	USA 100-2	
15	MENTS BY CONTRACTORS.		

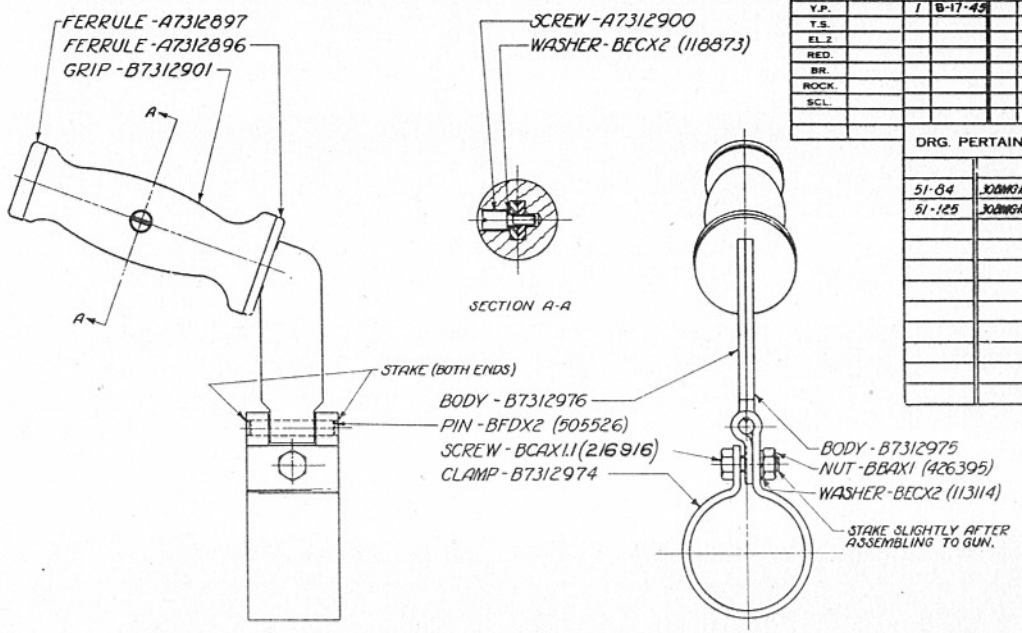

HANDLE, CARRYING, ASSEMBLY
LIST OF DRAWINGS AND SPECIFICATIONS
SHOWING REVISIONS IN EFFECT ON

7312973

PHYSICAL PROPERTIES	
Y.P.	
T.S.	
EL.2	
RED.	
BR.	
ROCK.	
SCL.	

APRIL 23, 1945

REVISIONS			
1	8-17-45		

DRG. PERTAINS TO	
51-84	30BMG M19A4 FLEX
51-125	30BMG M19A6

SYMBOL

D F TSMAN	TRACER	L'DG D FTSMAN
WSB	DCP	L.A.C.
CHECKER		CHIEF D FTSMAN
Cash		

SUBMITTED:-
ORD. ENG. ORD. DEPT.

APPROVED BY ORDER OF THE CHIEF OF ORDNANCE:-
LT. COL. ORD. DEPT.

ORDNANCE DEPT., U. S. A.

SUPERSEDES B224864 WITH CHANGE 8-17-45

0 1 2 3 4 5 6 7 8 9 10 11 INCHES

C7312973

A 7312896

HEAT TREATMENT & FINAL FINISH	PHYSICAL PROPERTIES						JAN. 25, 1945
	Y.P.		RED		ROCK		REVISIONS
	T.S.		BR.				1² 4-23-45
TYPE II CLASS B	EL. 2						2² 7-4-45

51-102	.30B.A.R.-M1918A2
51-125	.30B.M.G.-M1919A6

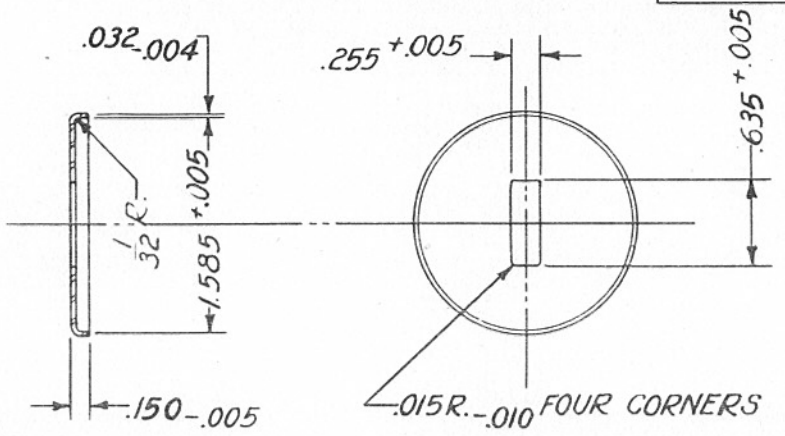

FERRULE, FRONT, CARRYING HANDLE GRIP (7312896

STEEL WD 1020

FINISH f

MANUFACTURING COMPONENT

SCALE 1/1

REF. SA18617

A7312896

DRIP PERTAINS TO

C7312902	HANDLE, CARRYING, ASSEM.
C7312973	HANDLE, CARRYING, ASSEM.
C7313084	HANDLE, CARRYING, ASSEM.
B7313098	GRIP, CARRYING HANDLE, ASM.
51-10	.30BMG-M1917A1
51-84	.30BMG M1919A4FLEX

TOLERANCE ON DIMENSIONS NOT OTHERWISE SPECIFIED

DECIMAL ± .01

FRACTIONAL ± 1/64

ANGULAR ±

DIFTSMAN	TRACER	ENGINEER
T.V.B.	D.E.P.	L & C
CHECKER		ENGINEER
W.S.B.		

SUBMITTED:-

ORD. ENG., ORD. DEPT., U.S.A.

APPROVED BY ORDER OF THE CHIEF OF ORDNANCE:-

LT. COL., ORD. DEPT., U.S.A.

ORDNANCE DEPT., U.S.A.

Drawing # A7312897, Ferrule
is not in the government's
drawing file

A 7312900

HEAT TREATMENT & FINAL FINISH	PHYSICAL PROPERTIES						JAN. 25, 1945
CYANIDE .003 DEEP	Y.P.		RED		ROCK		REVISIONS
	T.S.		BR.				1 4-23-45
TYPE II, CLASS B	EL. 2						2' 7-4-45

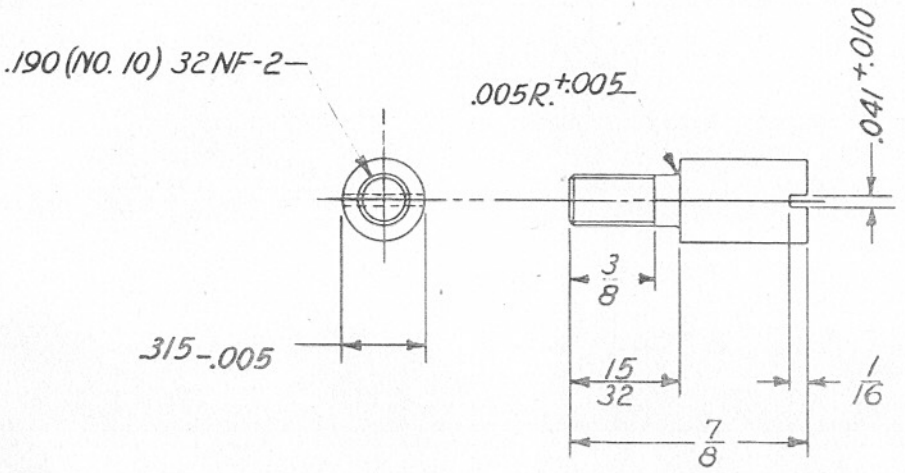

SCREW, CARRYING HANDLE GRIP (7312900)

STEEL WD 1020

FINISH X

REF. SA18618

SCALE 2/1

A 7312900

DR'G PERTAINS TO

C7312902	HANDLE, CARRYING, ASSEM.
C7312973	HANDLE, CARRYING, ASSEM.
C7313084	HANDLE, CARRYING, ASSEM.
51-10	.30BMG-M1917A1
51-84	.30BMGM1919A4FLEX
51-102	.30BAR-M1918A2
51-125	.30BMG-M1919A6

TOLERANCE ON DIMENSIONS NOT OTHERWISE SPECIFIED

DECIMAL ± .01

FRACTIONAL ± 1/64

ANGULAR ±

DFTSMAN	TRACER	ENGINEER
M.E.B.	D.E.P.	L.S.C.
CHECKER		ENGINEER
M.E.B.		

SUBMITTED:-

ORD. ENG., ORD. DEPT., U.S.A.

APPROVED BY ORDER OF THE CHIEF OF ORDNANCE:-

LT. COL., ORD. DEPT., U.S.A.

ORDNANCE DEPT., U.S.A.

HEAT TREATMENT AND FINAL FINISH

DIP IN GUN STOCK PROTECTIVE FINISH COMPOUND. ALTERNATIVE, RAW LINSEED OIL.

PHYSICAL PROPERTIES	
Y.P.	
T.S.	
EL.2	
RED.	
BR.	
ROCK.	

JAN. 25, 1945

REVISIONS

1²	4-23-45			
2'	7-4-45			

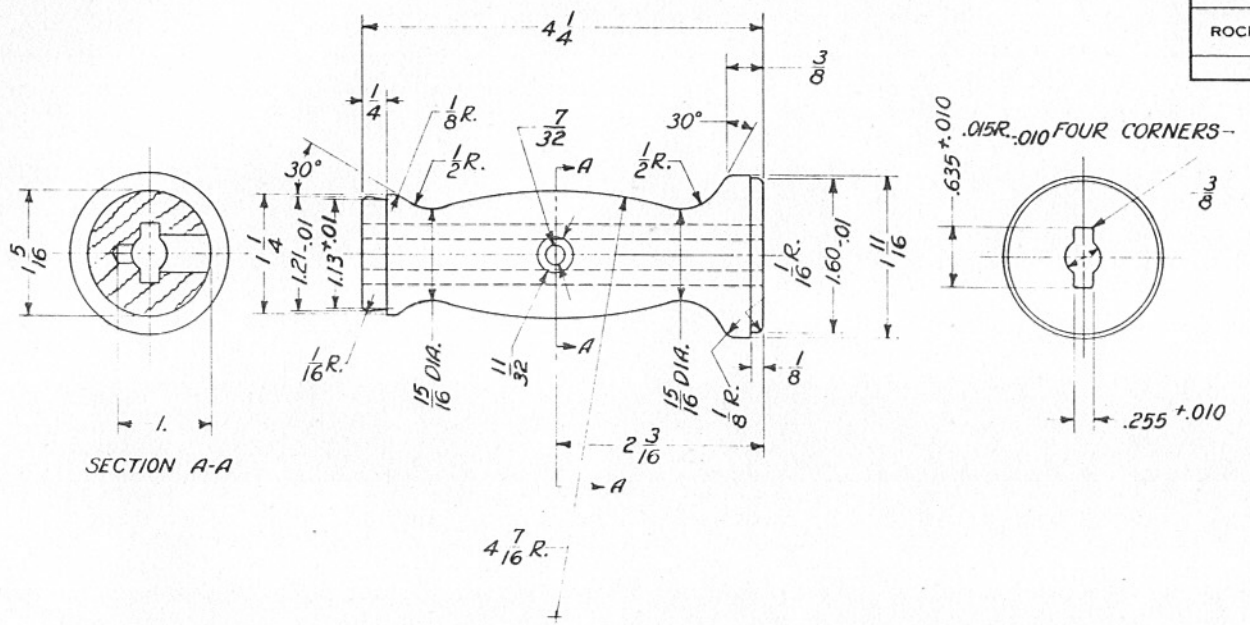

GRIP, CARRYING HANDLE (C) 7312901

WOOD - BLACK WALNUT

MANUFACTURING COMPONENT

TOLERANCE ± 1/64 ALLOWED ON ALL DIMENSIONS UNLESS OTHERWISE SPECIFIED.

REF. SA 18616
SPRINGFIELD ARMORY

SCALE 1/1

B 7312901

DRG. PERTAINS TO

C7312902	HANDLE, CARRYING, ASSEM.
C7312973	HANDLE, CARRYING, ASSEM.
C7313084	HANDLE, CARRYING, ASSEM.
B7313098	GRIP, CARRYING HANDLE, ASM.
51-10	.30BMG-M1917A1
51-84	.30BMG-M1919A4FLEX
51-102	.30BAR-M1918A2
51-125	.30BMG-M1919A6

D'FTSMAN	TRACER	L'DG D'FTSMAN
J.S.B.	D.E.P.	L.S.C.

CHECKER		CHIEF D'FTSMAN
J.S.S.	1st SP. 00	E.P.A.

SUBMITTED:-

G. T. Hopkins
ORD. ENG. ORD. DEPT.

APPROVED BY ORDER OF THE CHIEF OF ORDNANCE:-

T. B. Whittaker
LT. COL., ORD. DEPT.

ORDNANCE DEPT., U.S.A.

HEAT TREATMENT AND FINAL FINISH
FINISH TYPE II CLASS "A" OR "B"

PHYSICAL PROPERTIES	
Y.P.	
T.S.	
EL.2	
RED.	
BR.	
ROCK.	

APRIL 23, 1945

REVISIONS

1'	8-17-45			

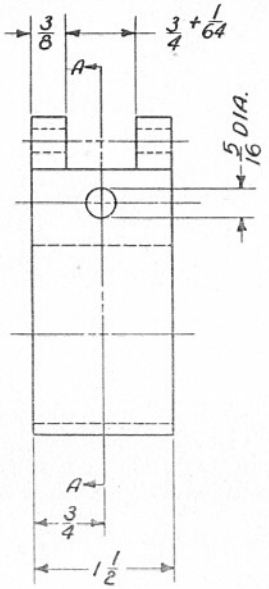

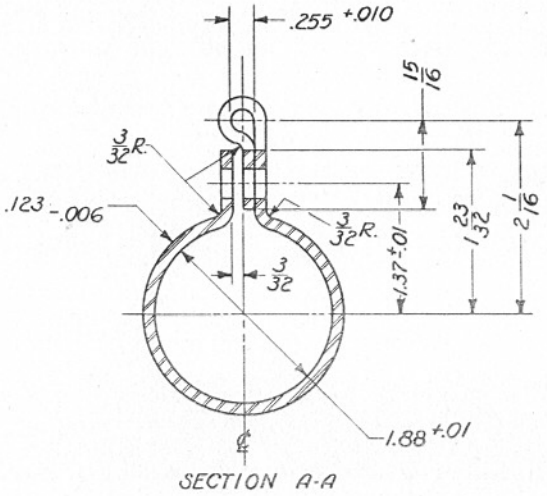

SECTION A-A

CLAMP, CARRYING HANDLE (7312974)

STEEL - WD-1020
FINISH X

TOLERANCE ±1/64 ALLOWED ON ALL DIMENSIONS UNLESS OTHERWISE SPECIFIED.

SCALE 1/1

SPRINGFIELD ARMORY

B 7312974

DRG. PERTAINS TO

C7312973	HANDLE, CARRYING, ASSEMBLY
51-125	B.M.G. CAL. .30, M1918

D'FTSMAN	TRACER	L'DG D'FTSMAN
WEB	DCR	L.A.C.
CHECKER		CHIEF D'FTSMAN
Carl		

SUBMITTED:-

ORD. ENG. ORD. DEPT.

APPROVED BY ORDER OF THE CHIEF OF ORDNANCE:-

LT. COL., ORD. DEPT.

ORDNANCE DEPT., U.S.A.

HEAT TREATMENT AND FINAL FINISH

PHYSICAL PROPERTIES	
Y.P.	
T.S.	
EL.2	
RED.	
BR.	
ROCK.	

APRIL 23, 1945

REVISIONS

1²	8-17-45		

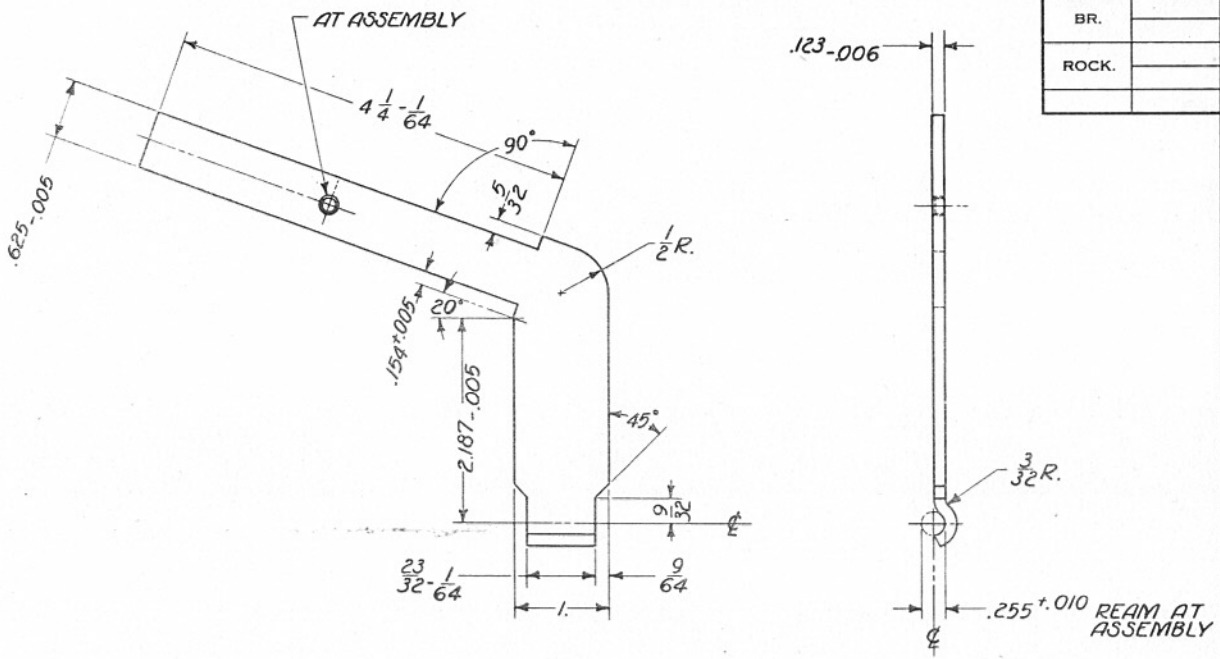

BODY, CARRYING HANDLE, L.H. (7312975)

STEEL - WD 1020

FINISH f

MANUFACTURING COMPONENT

TOLERANCE ±.01 ALLOWED ON ALL DIMENSIONS UNLESS OTHERWISE SPECIFIED.

SCALE 1/1

SPRINGFIELD ARMORY

B 7312975

DRG. PERTAINS TO

B7312977	BODY, CARRYING HANDLE, ASM.
C7312973	HANDLE, CARRYING, ASSEMBLY
51-125	B.M.G., CAL..30, M1919A6

D'FTSMAN	TRACER	L'DG D'FTSMAN
WEB	DEP	J. S. C.
CHECKER		CHIEF D'FTSMAN
Cam		

SUBMITTED:-

E. S. Hopkins

ORD. ENG., ORD. DEPT.

APPROVED BY ORDER OF THE CHIEF OF ORDNANCE:-

B. Whittaker

LT. COL., ORD. DEPT.

ORDNANCE DEPT., U.S.A.

HEAT TREATMENT AND FINAL FINISH

PHYSICAL PROPERTIES	
Y.P.	
T.S.	
EL.2	
RED.	
BR.	
ROCK.	

APRIL 23, 1945

REVISIONS

1'	8-17-45		

DRG. PERTAINS TO

B7312977	BODY, CARRYING HANDLE, ASM.
C7312973	HANDLE, CARRYING, ASSEMBLY
51-125	B.M.G., CAL..30, M1919A6

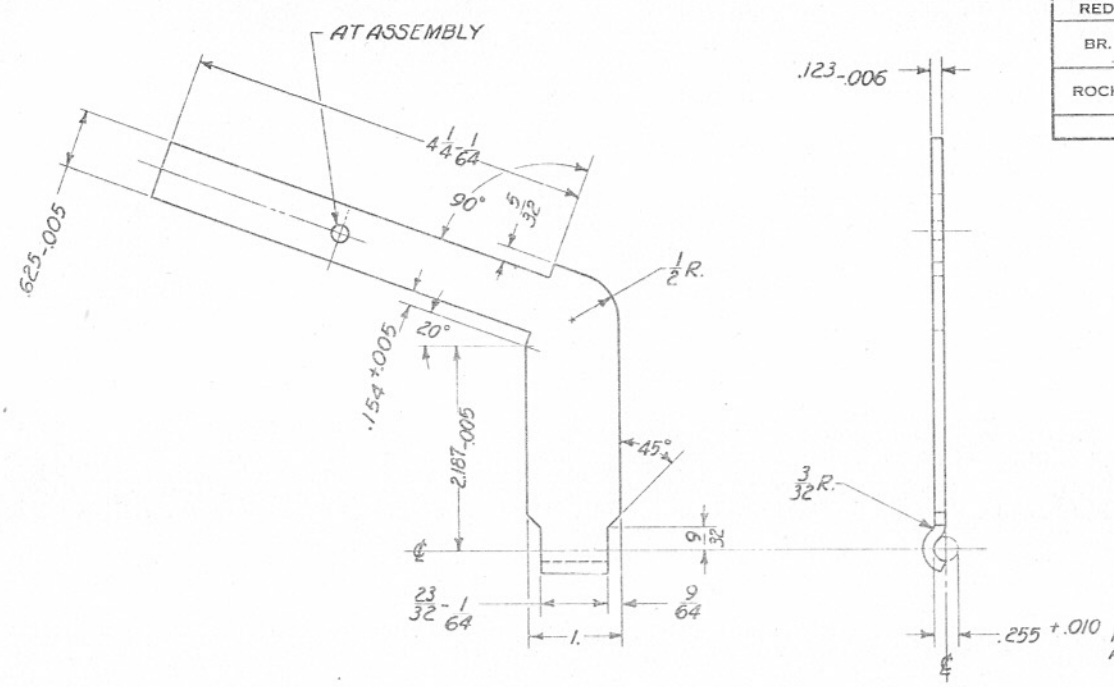

BODY, CARRYING HANDLE, R.H. (7312976

STEEL-WD 1020

FINISH f

MANUFACTURING COMPONENT

TOLERANCE ±.01 ALLOWED ON ALL DIMENSIONS UNLESS OTHERWISE SPECIFIED.

SCALE 1/1

SPRINGFIELD ARMORY

B7312976

D'FTSMAN	TRACER	L'DG D'FTSMAN
MEB	DCP.	L.S.G.
CHECKER		CHIEF D'FTSMAN
Cam		EJO

SUBMITTED:-

ORD ENG. ORD. DEPT.

APPROVED BY ORDER OF THE CHIEF OF ORDNANCE:-

LT. COL., ORD. DEPT.

ORDNANCE DEPT., U.S.A.

NUT, HEXAGON, NC-2
REGULAR, SEMI-FINISHED

BBAX1

ORDNANCE DEPARTMENT STANDARD (COMMERCIAL)

HYH APPROVED 7-7-31 DATE

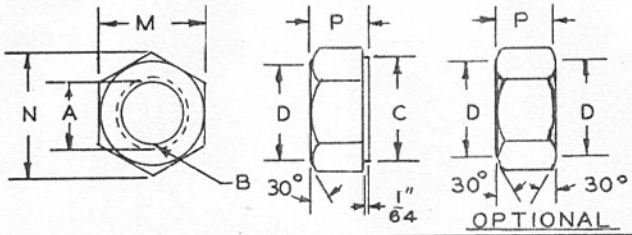

A	Diameter, Nominal / Major Thd. Diameter Min.	1/4 .2500	5/16 .3125	3/8 .3750	7/16 .4375	1/2 .5000
B	Threads Per Inch	20	18	16	14	13
M	Width Across Flats — Nom.	7/16	9/16	5/8	3/4	13/16
	Max.	.4375	.5625	.6250	.7500	.8125
	Min.	.425	.547	.606	.728	.788
N	Across Corners Min.	.485	.624	.691	.830	.898
P	Thickness — Nom.	13/64	1/4	5/16	23/64	27/64
	Max.	.219	.267	.330	.378	.442
	Min.	.187	.233	.294	.340	.402
	MATERIAL AND FINISH	ORDNANCE PART NUMBER - STANDARD				
	Steel, Commercial Plain Finish Cadmium or Zinc Plated Phosphate Coated Seez Pruf Thd. Coated	220064 220069 426395 503163	220065 220070 503164	220066 220071 427195 503165	220067 220072 503166	220068 220073 503167
	Brass, Commercial Plain Finish Tin Plated	220074	220075	220076 427193	220077	220078
	Steel, Alloy * Plain Finish					426874
	Steel, Corrosion Resisting Plain Finish	427262	426748	427263		427018
	MATERIAL AND FINISH	ORDNANCE PART NUMBER - LIMITED STANDARD				
	Steel, Commercial Lead Coated	426394		426396		

Material: Steel, Commercial, Rockwell Hardness B-78. Dimensions in inches.
Brass, Commercial.
Steel, alloy in accordance with Drawing AEAX8.
Steel, corrosion resisting, Grade 7A, spec. QQ-S-763.

Example for Ordering: NUT, hex., s-fin., S., reg., cd-pltd., 1/2"-13NC-2, drg. BBAX1, part no. 220073.

Reference: A.S.A. B18.2-1941.

Diameter of washer face C = M max. -5%. Diameter of top circle D = M max. -15%.

Note: Alloy Steel Nuts shall be stamped with the letter H on one side of the hexagon.

Supersedes BBAXI without charge 6-20-45

Revision ⑥ 6-20-45

SCREW, CAP, HEX. HD., NC-2
(AUTOMOTIVE HEX. HEAD BOLT)

BCAX1.1

ORDNANCE STANDARD (COMMERCIAL)

Holt APPROVED 6-24-44 DATE

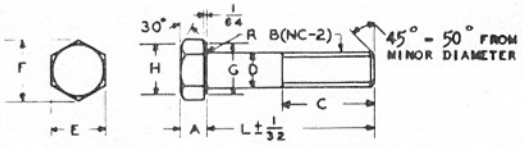

NOMINAL DIAMETER		1/4	5/16	3/8	7/16	1/2	9/16	
THREADS PER INCH		20	18	16	14	13	12	
D BODY DIAMETER	MAX.	.2500	.3125	.3750	.4375	.5000	.5625	
	MIN.	.2460	.3085	.3710	.4335	.4960	.5575	
E ACROSS FLATS	NOM.	7/16	1/2	9/16	5/8	3/4	13/16	
	MAX.	.4375	.5000	.5625	.6250	.7500	.8125	
	MIN.	.428	.489	.551	.612	.736	.798	
F WIDTH ACROSS CORNERS MIN.		.488	.557	.628	.698	.840	.910	
A THICKNESS	NOM.	3/16	15/64	9/32	21/64	3/8	27/64	
	MAX.	.194	.242	.288	.338	.386	.433	
	MIN.	.181	.227	.273	.319	.364	.410	
C FULL THREAD LENGTH	MAX.	15/16	1-1/16	1-3/16	1-5/16	1-7/16	1-9/16	
	MIN.	3/4	7/8	1	1-1/8	1-1/4	1-3/8	
R RADIUS	MAX.	1/64	1/64	1/64	1/64	1/64	1/64	
* UNTHREADED LENGTH	MAX.	1/16	3/32	3/32	3/32	1/8	1/8	
L LENGTH		ORDNANCE PART NUMBER, PLAIN FINISH						
7/16		193970						
1/2								
5/8			193991					
11/16			216920					
3/4		216916	216959	193999	213607	216982		
7/8		216958		216971	216972	216983		
L LENGTH		ORDNANCE PART NUMBERS, CADMIUM OR ZINC PLATED						
7/16		193971						
1/2								
5/8			193992					
11/16			217921					
3/4		214002	193990	214386	214458	213652		
7/8		193985		213600	213608	213653		
L LENGTH		ORDNANCE PART NUMBER, PHOSPHATE COATED						
7/16								
1/2								
5/8								
11/16								
3/4				216398				
7/8								
L LENGTH		ORDNANCE PART NUMBER, CORROSION RESISTING STEEL						
7/16								
1/2		213615	213622	213628				
5/8		213616	213623	213629				
11/16								
3/4		213618	213625	213631	213637	213643		
7/8		213620	213626	213632	213638	213644		

FOR ADDITIONAL LENGTHS SEE DRAWINGS BCAX1.2, BCAX3, BCAX3.1, BCAX3.2

DIMENSIONS IN INCHES

MATERIAL: CARBON STEEL - MIN. YIELD STRENGTH - 60,000 P.S.I.
CORROSION RESISTING STEEL - GRADE 7D, SPEC. QQ-S763

EXAMPLE FOR ORDERING: SCREW, CAP, HEX. HD., STEEL (PLAIN FINISH), 1/4" - 20NC-2 x 7/16", DRG. BCAX1.1, ORD. PART NO. 193970.

TOLERANCES

MINIMUM BODY DIAMETER; MINUS .004" ON SIZES 1/4" TO 1/2" INCL., MINUS .005" ON SIZES ABOVE 1/2".
MINIMUM FULL THREAD LENGTH = 2D + 1/4", MAX. = MIN. + 3/16.
* MAXIMUM UNTHREADED LENGTH = 1-1/2 X PITCH FOR CAP SCREWS TOO SHORT TO ALLOW FORMULA THREAD LENGTH.
DIAMETER OF WASHER FACE G = E MAX. -5% DIAMETER OF TOP CIRCLE H = E MAX. -15%

SUPERSEDES OLD TRACING BCAXI UNDER REVISION DATE OF 6-24-44

① 9-29-44

WASHER, LOCK
S.A.E. STANDARD

BECX2

ORDNANCE STANDARD (COMMERCIAL)

APPROVED 1-29-38 DATE

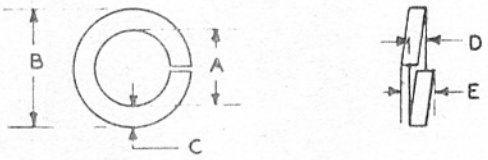

NOMINAL SIZE	DIAMETER		WASHER SECTIONS		FREE HEIGHT -E-	ORDNANCE PART NUMBER FOR THE FINISH SPECIFIED		
	INSIDE -A-	OUTSIDE -B-	WIDTH -C-	THICKNESS -D-		PLAIN FINISH	CADMIUM OR ZINC PLATED	LEAD PLATED
#2 (.086)	.089	.133	.022	.022	AFTER A FIRST COMPRESSION TO FLAT, THE FREE HEIGHT OF THE LOCK WASHERS SHALL BE AT LEAST 1-2/3 TIMES ITS THICKNESS. SUBSEQUENT COMPRESSIONS SHALL NOT FURTHER REDUCE THIS FREE HEIGHT.	192298	192300	
#4 (.112)	.115	.177	1/32	.022		118871	131180	
#6 (.138)	.143	.205	1/32	1/32		118872	131181	
#8 (.164)	.169	.263	3/64	1/32		118869	131182	
#10 (.190)	.200	.294	3/64	3/64		118873	131183	
#12 (.216)	.226	.351	1/16	3/64		118874	131184	
1/4	.265	.453	3/32	3/64		113114	121637	
5/16	.328	.578	1/8	3/64		112723	120379	218329
3/8	.390	.640	1/8	1/16		110730	120381	
7/16	.453	.767	5/32	1/16		110405	121621	
1/2	.515	.859	11/64	1/16		106500	120239	
9/16	.593	.968	3/16	3/32		112724	131204	
5/8	.655	1.062	13/64	3/32		103334	131205	
11/16	.718	1.155	7/32	1/8		115006	131206	
3/4	.780	1.280	1/4	1/8		103335	131207	
7/8	.905	1.437	17/64	5/32		103336	131208	
1	1.030	1.655	5/16	3/16		117661	131209	
1-1/8	1.155	1.905	3/8	3/16		118027	131210	
1-1/4	1.280	2.155	7/16	3/16		117613	131211	
1-3/8	1.405	2.280	7/16	1/4		118028	131212	
1-1/2	1.530	2.530	1/2	1/4		118029	131213	

MATERIAL: STEEL, COMMERCIAL. DIMENSIONS IN INCHES.

NOTE: LOCK WASHERS CONFORMING TO THESE GENERAL DIMENSIONS, WHETHER NON-TANGLING, POSITIVE OR SIMILAR COMMERCIAL TYPES, MAY BE PURCHASED UNDER THE SYMBOL SHOWN.

EXAMPLE FOR ORDERING: WASHER, LOCK, STEEL, 1/2" x 11/64" x 1/16", (PLAIN), DRG. BECX2, ORD. PART NUMBER 106500.

SUPERSEDES OLD TRACING BECX2 UNDER REVISION DATE OF 4-22-44

REVISION ① 4-22-44

PIN, STRAIGHT, STEEL

BFDX2

ORDNANCE STANDARD (ORDNANCE DESIGN)

H-B-H 1-31-34
APPROVED DATE

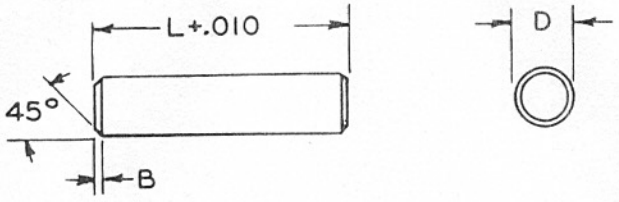

DIAM. D OF PIN	NOM.	1/4	5/16			
	MAX.	.2505	.3130			
	MIN.	.2495	.3120			
B CHAMFER		1/64	1/32			

LENGTH -L-	ORDNANCE PART NUMBER PLAIN FINISH					
3/4	505520					
7/8	505522	505532				
1	505523	505533	$\frac{3}{8}$ $\frac{7}{16}$ & $\frac{1}{2}$ DIAM. PINS			
1-1/8	505524	505534	ARE TRANSFERRED TO			
1-1/4	505525	505535				
1-3/8	505526	505536	DRAWING BFKX1.			
1-1/2	505527	505537				
1-5/8	505528	505538				
1-3/4	505529	505539				
1-7/8	505530	505540				
2	505531	505541				
2-1/8		505542				
2-1/4		505543				
2-3/8		505544				
2-1/2		505545				
2-3/4						
3						
3-1/4						
3-1/2						
3-3/4						
4						
	PHOSPHATE COATED					
3/4	505521					

MATERIAL:
DRILL ROD, COMMERCIAL.

DIMENSIONS IN INCHES.
TOLERANCE ON DRILL ROD ±.0005".

EXAMPLE FOR ORDERING: PIN, STRAIGHT, DRILL ROD, 1/4" x 3/4", PLAIN, DRG. BFDX2, PART NO. 505520.

NOTE: PINS SHOULD BE .0005" TO .001" DRIVE FIT.

ENGINEERING ADMINISTRATIVE BRANCH - SPOIP

SUPERSEDES OLD TRACING BFDX2 UNDER REVISION DATE OF 10-10-44

REVISION (3) 10-10-44 (4) 2-21-45

LINE NUMBER	LIST OF DRAWINGS	DRAWING NUMBER	REVISION
1	HANDLE, CARRYING, ASSEMBLY	C7312973	
2			
3	COMBINED LIST OF ALL PARTS DRAWING.	C7313101	
4			
5			
6		A7312896	
7		A7312897	
8		A7312900	
9		B7312901	
10		B7312974	
11		B7312975	
12		B7312976	
13		B7312977	
14		B7313098	
15	NUT, HEXAGON, NC-2	BBAX1	
16	PIN, STRAIGHT, STEEL	BFDX2	
17	SCREW, CAP, HEXAGON HEAD, NC-2	BCAX1.1	
18	WASHER, LOCK	BECX2	

LINE NUMBER	LIST OF SPECIFICATIONS	SPECIFICATION NUMBER	REVISION
1	HANDLE, CARRYING, ASSEMBLY		
2			
3	FINISHES, PROTECTIVE, FOR IRON AND STEEL PARTS	USA 57-0-2	
4	MANUFACTURE AND INSPECTION OF SMALL ARMS WEAP-	USA 52-0-1	
5	ONS, SPARE AND REPLACEMENT PARTS AND ACCESSORIES.		
6	METALS; GENERAL SPECIFICATION FOR INSPECTION OF.	FED. QQ-M-151	
7	FINISH, PROTECTIVE, GUN STOCK (FOR SMALL ARMS)	SXS-147	
8	OIL, LINSEED, RAW.	FED JJJ-0-336	
9	STEEL, CARBON AND ALLOY, BARS	USA 57-107	
10	STEEL, CARBON AND ALLOY; SHEETS AND STRIPS	USA 57-136	
11	WOOD, BLACK WALNUT, FOR SMALL ARMS	USA 82-11	
12	GENERAL SPECIFICATION FOR PACKAGING AND	USA 100-14	
13	PACKING FOR OVERSEAS SHIPMENT.		
14	STANDARD SPECIFICATION FOR MARKING SHIP-	USA 100-2	
15	MENTS BY CONTRACTORS.		

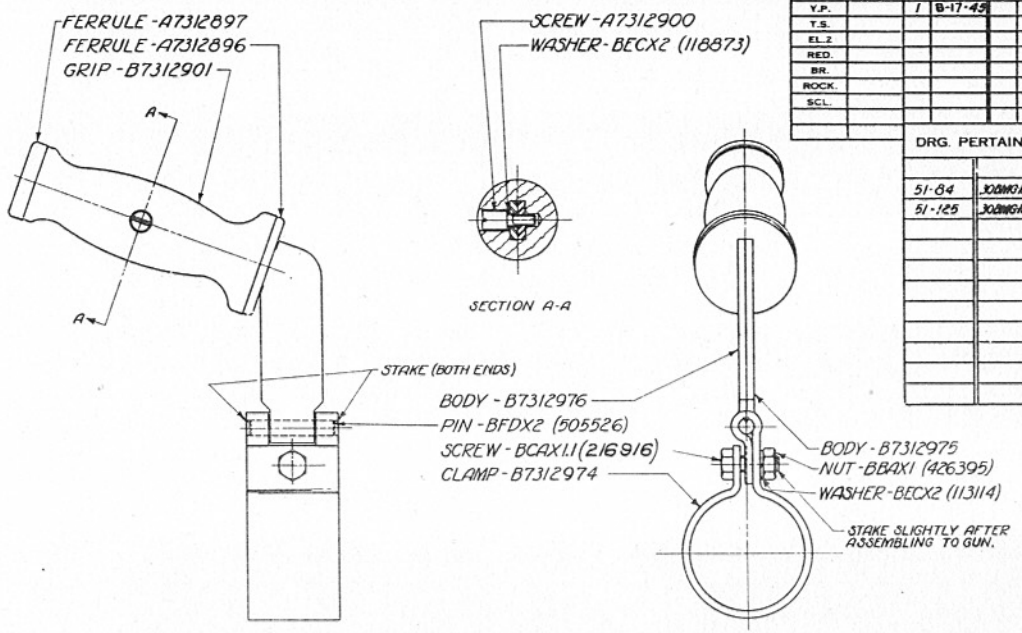

HANDLE, CARRYING, ASSEMBLY
LIST OF DRAWINGS AND SPECIFICATIONS
SHOWING REVISIONS IN EFFECT ON

7312973

PHYSICAL PROPERTIES	
Y.P.	
T.S.	
EL.2	
RED.	
BR.	
ROCK.	
SCL.	

APRIL 23, 1945

REVISIONS			
1	8-17-45		

DRG. PERTAINS TO	
51-84	30BMG M19A4 FLEX
51-125	30BMG M19A6

SYMBOL

D F TSMAN	TRACER	L'DG D FTSMAN
WSB	DCP	L.A.C.
CHECKER		CHIEF D FTSMAN
Cash		

SUBMITTED:-
ORD. ENG. ORD. DEPT.

APPROVED BY ORDER OF THE CHIEF OF ORDNANCE:-
LT. COL. ORD. DEPT.

ORDNANCE DEPT., U. S. A.

SUPERSEDES B224864 WITH CHANGE 8-17-45

0 1 2 3 4 5 6 7 8 9 10 11 INCHES

C7312973